4K60 USB-C over HDBaseT Extender (100m) with USB 2.0

User Manual

VER 1.0

Thank you for purchasing this product

For optimum performance and safety, please read these instructions carefully before connecting, operating or adjusting this product. Please keep this manual for future reference.

Surge protection device recommended

This product contains sensitive electrical components that may be damaged by electrical spikes, surges, electric shock, lighting strikes, etc. Use of surge protection systems is highly recommended in order to protect and extend the life of your equipment.

Caution

The network cable connection method required for this product is direct connection. Please do not cross connect.

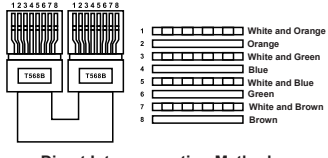

Direct Interconnection Method

Table of Contents

1. Introduction.....1

2. Features.....1

3. Package Contents.....2

4. Specifications.....2

5. Operation Controls and Functions.....4

5.1 Transmitter Panel.....4

5.2 Receiver Panel.....5

5.3 IR Pin Definition.....7

6. Application Example.....8

1. Introduction

This is a high-performance, long-reach HDBaseT extender, which can transmit USB-C, IR, RS-232 and USB 2.0 signal to a long distance up to 100m/328ft over CAT5e/6 cable. Video resolution is up to 4K@60Hz (4:4:4). It converts the USB-C signal to standard HDBaseT signal and transmits it via LAN cable. It can easily control the source device or display device from the remote end through bi-directional IR signal pass-through function. It supports EDID management (COPY TV/STD) and PoC function.

The Extender can be widely used in other fields such as video conference system, multimedia signal broadcasting, etc.

2. Features

☆ Compliant with USB Type-C Displayport 1.4a ALT mode
☆ HDCP 2.3/2.2/1.x compliant
☆ Support HBR3, HBR2, HBR and RBR (8.1/5.4/2.7/1.62Gbps)
☆ Video resolution is up to 4K2K@50/60Hz 4:4:4
☆ The transmission distance is up to 100m/328ft via CAT5e/6 cable
☆ USB 2.0 signal transmission
☆ Support bi-directional IR, RS-232 control signal pass-through
☆ Audio formats: LPCM, Dolby Digital/Plus/EX, Dolby True HD, Dolby Atmos, DTS, DTS-EX, DTS-96/24, DTS High Res, DTS-HD Master Audio, DTS:X
☆ Support audio de-embedding on the Receiver
☆ Advanced EDID management
☆ HDR, HDR10, HDR10+, Dolby Vision, HLG pass-through
☆ Bi-directional PoC (Power over Cable) function
☆ Compact design for easy and flexible installation

3. Package Contents

① 1× 4K60 USB-C over HDBaseT Extender (Transmitter)
② 1× 4K60 USB-C over HDBaseT Extender (Receiver)
③ 1× 24V/1A Locking Power Supply
④ 1× IR Blaster Cable (1.5m)
⑤ 1× IR Wideband Receiver Cable (1.5m)
⑥ 2× 3-pin 3.5mm Phoenix Connector
⑦ 4× Mounting Ear
⑧ 8× Machine Screw (KM3*6)
⑨ 1× User Manual

4. Specifications

Technical	
USB Compliance	USB Type-C 1.1
HDCP Compliance	HDCP 2.3/2.2/1.x
Video Bandwidth	Up to 32.4Gbps (8.1/5.4/2.7/1.62Gbps)
Video Resolution (Input & Output)	Up to 4K2K@50/60Hz 4:4:4 * All available resolutions are shown as follow.
IR Level	5Vp-p
IR Frequency	Wideband 20K-60KHz
Color Space	RGB_4:4:4, YCbCr_4:4:4, YCbCr_4:2:2, YCbCr_4:2:0
Color Depth	8/10/12-bit
HDR	HDR, HDR10, HDR10+, Dolby Vision, HLG
Audio Format	LPCM, Dolby Digital/Plus/EX, Dolby True HD, Dolby Atmos, DTS, DTS-EX, DTS-96/24, DTS High Res, DTS-HD Master Audio, DTS:X
Transmission Distance	100m/328ft for 4K2K@60Hz over CAT5e/6 cable
ESD Protection	IEC 61000-4-2: ±8kV (Air-gap discharge) & ±4kV (Contact discharge)

Connection	
Transmitter	Input: 1× USB-C IN [USB-C, 24-pin female] 1× CHARGE [USB-C, 24-pin female] Output: 1× HDBT OUT [RJ45] Control: 1× IR IN [3.5mm audio jack] 1× IR OUT [3.5mm audio jack] 1× RS-232 [3-pin 3.5mm phoenix connector] 1× SERVICE [USB-C]
Receiver	Input: 1× HDBT IN [RJ45] Output: 1× USB-C OUT [USB-C, 24-pin female] 4× USB 2.0 DEVICE [USB-A, 4-pin female] 1× AUDIO OUT [3.5mm audio jack] Control: 1× IR IN [3.5mm audio jack] 1× IR OUT [3.5mm audio jack] 1× RS-232 [3-pin 3.5mm phoenix connector] 1× SERVICE [USB-C]
Mechanical	
Housing	Metal Enclosure
Color	Black
Dimensions	Transmitter/Receiver: 157mm (W) × 88mm (D) × 20mm (H)
Weight	Transmitter: 378g; Receiver: 390g
Power Supply	DC 24V/1A; Support bi-directional PoC function
Power Consumption	Transmitter: 6W; Receiver: 12.96W
Operating Temperature	0°C ~ 40°C / 32°F ~ 104°F
Storage Temperature	-20°C ~ 60°C / -4°F ~ 140°F
Operating Humidity	20%~80% (relative humidity, non-condensing)
Storage Humidity	10%~90% (relative humidity, non-condensing)

*** All available input/output resolutions:**

640x480p60Hz, 800x600p60Hz, 1024x768p60Hz, 1280x1024p60Hz, 1360x768p60Hz, 1440x900p60Hz, 1440x1050p60Hz, 1600x1200p60Hz, 720x480i59.94Hz(480i59), 720x480p59.94Hz(480p59), 720x576i50Hz(576i50), 720x576p50Hz(576p50),

(Continued)

1280x720p50Hz(720p50), 1280x720p59.94Hz(720p59), 1280x720p60Hz(720p60), 1920x1080i50Hz(1080i50), 1920x1080i59.94Hz(1080i59), 1920x1080i60Hz(1080i60), 1920x1080p23.98Hz(1080p23), 1920x1080p24Hz(1080p24), 1920x1080p25Hz(1080p25), 1920x1080p29.97Hz(1080p29), 1920x1080p30Hz(1080p30), 1920x1080p50Hz(1080p50), 1920x1080p59.94Hz(1080p59), 1920x1080p60Hz(1080p60), 3840x2160p23.98Hz(2160p23), 3840x2160p24Hz(2160p24), 3840x2160p25Hz(2160p25), 3840x2160p29.97Hz(2160p29), 3840x2160p30Hz(2160p30), 3840x2160p50Hz(2160p50), 3840x2160p59.94Hz(2160p59), 3840x2160p60Hz(2160p60), 4096x2160p23.98Hz, 4096x2160p24Hz, 4096x2160p25Hz, 4096x2160p29.97Hz, 4096x2160p30Hz, 4096x2160p50Hz, 4096x2160p59.94Hz, 4096x2160p60Hz

5. Operation Controls and Functions

5.1 Transmitter Panel

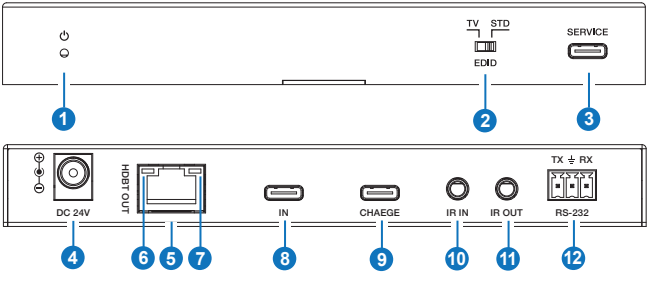

No.	Name	Function Description
1	PWR LED	The green LED is on when the Transmitter is powered on.
2	EDID DIP switch	Used for EDID setting. **TV:** Copy EDID from the connected display device on RX. **STD:** Standard EDID (4K60 4:4:4 SDR 2CH).
3	SERVICE	Used for firmware update and serial command transmission.

No.	Name	Function Description
4	DC 24V	DC 24V/1A power input port. *Note that the extender supports POC function, it means that either Transmitter or Receiver is connected to 24V/1A power supply, the other doesn't need power supply.*
5	HDBT OUT	HDBT output port, connected to the HDBT IN port on the Receiver with CAT cable.
6	Link Signal Indicator (Green)	▪ On: Transmitter and Receiver are connected and linked. ▪ Off: Transmitter and Receiver are not connected.
7	Data Signal Indicator (Yellow)	▪ On: Video signal with HDCP. ▪ Flashing: Video signal without HDCP. ▪ Off: No video signal.
8	USB-C IN	Connects to a source device with USB cable.
9	CHARGE	Connects this port to an external 65W/100W power adapter. Then the USB-C IN port can charge the connected notepad.
10	IR IN	Connects to IR receiver cable. The IR signal will be emit to the IR OUT port on the Receiver.
11	IR OUT	Connects to IR blaster cable. The IR signal is from the IR IN port on the Receiver.
12	RS-232	3-pin phoenix connector, used for RS-232 command transmission between the Transmitter and Receiver.

5.2 Receiver Panel

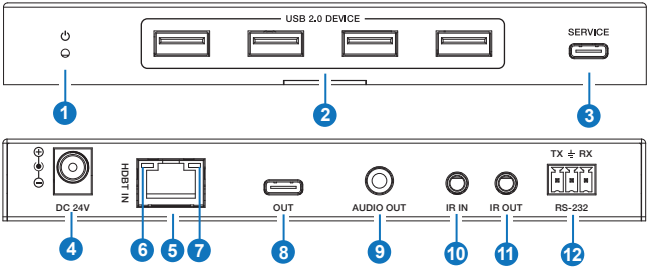

No.	Name	Function Description
1	PWR LED	The green LED is on when the Receiver is powered on.
2	USB 2.0 DEVICE	USB 2.0 type A ports, connected to USB 2.0 devices such as U disk, USB camera, keyboard and mouse. **Note:** 5V/500mA power output is supported on each port.
3	SERVICE	USB-C port, used for firmware update.
4	DC 24V	DC 24V/1A power input port. *Note that the extender supports POC function, it means that either Transmitter or Receiver is connected to 24V/1A power supply, the other doesn't need power supply.*
5	HDBT IN	HDBT input port, connected to the HDBT OUT port of the Transmitter with CAT cable.
6	Link Signal Indicator (Green)	▪ On: Transmitter and Receiver are connected and linked. ▪ Off: Transmitter and Receiver are not connected.
7	Data Signal Indicator (Yellow)	▪ On: Video signal with HDCP. ▪ Flashing: Video signal without HDCP. ▪ Off: No video signal.
8	USB-C OUT	Connects to a display device such as touch screen or monitor with USB cable.
9	AUDIO OUT	Analog audio output port, connected to an audio device.
10	IR IN	Connects to IR receiver cable. The IR signal will be emit to the IR OUT port of the Transmitter.
11	IR OUT	Connects to IR blaster cable. The IR signal is from the IR IN port of the Transmitter.
12	RS-232	3-pin phoenix connector, used for RS-232 command transmission between the Transmitter and Receiver.

5.3 IR Pin Definition

IR Receiver and Blaster pin's definition is as below:

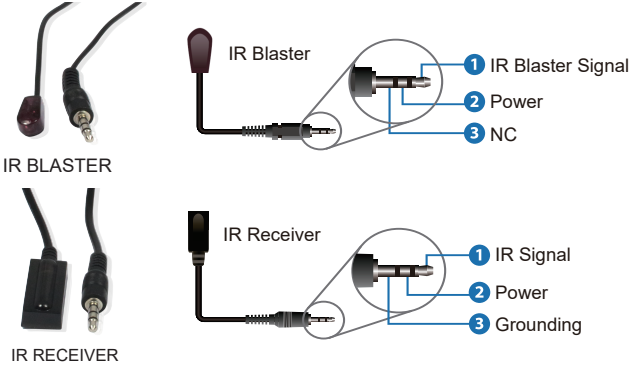

Note:

When the angle between the IR receiver and the remote control is 45 °, the transmission distance is 0-5 meters;

When the angle between the IR receiver and the remote control is 90 °, the transmission distance is 0-8 meters.
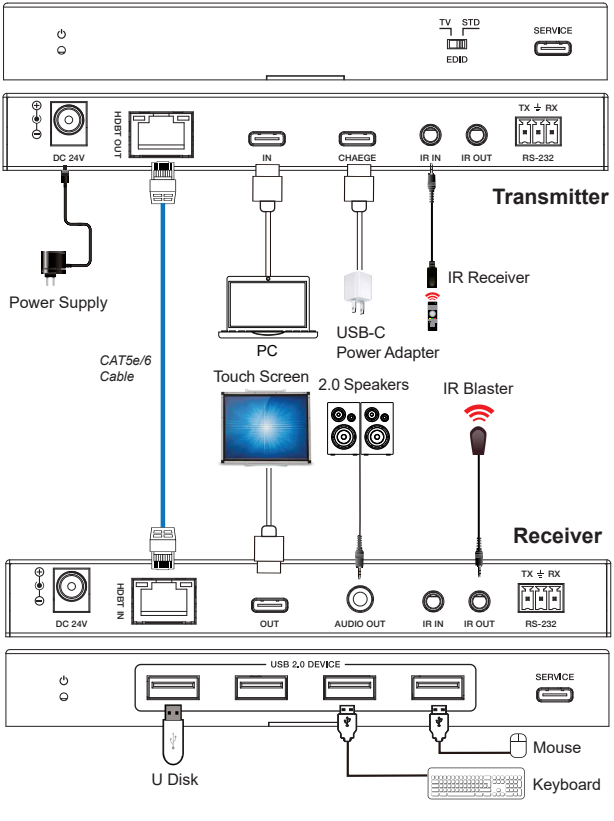
6. Application Example